ONTARIO AMATEUR

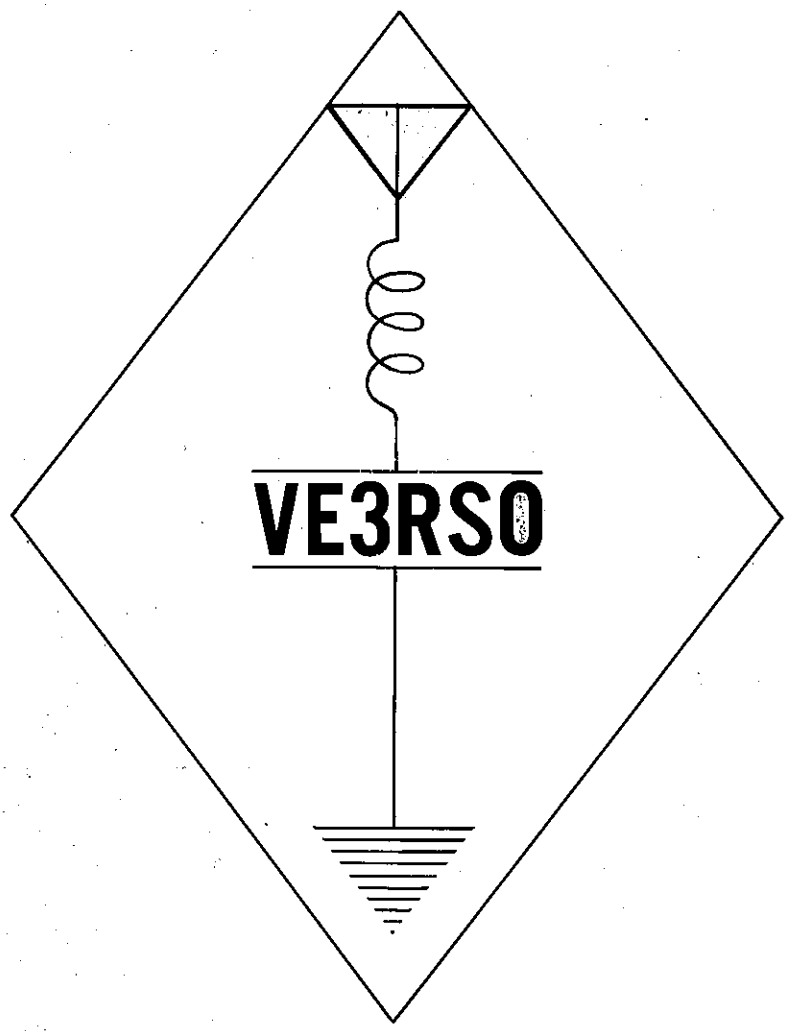

RADIO SOCIETY OF ONTARIO INC.

RADIO SOCIETY OF ONTARIO INCORPORATED — OFFICERS & DELEGATES

DIRECTORS

VE3CLK W. G. Finlay, VE3AYS Del Spaetzel, VE3UR Ray Hunter

DELEGATES

Toronto:	VE3UR Ray Hunter, VE3CO W. Choat, VE3RX Art Meen VE3KA W.F. Brennan, VE3AL A. M. Lowry
Hamilton:	VE3AYS Del Spaetzel, VE3CKU T.J. Vince
London:	VE3AAO John Williams, VE3ETM Tom McKee
Ottawa:	VE3SZ Lorne Doreen, VE3GI Burt Coy
Kingston:	VE3DHH B. H. Cook
Kitchener:	VE3AVF Len Shantz
Sault Ste. Marie:	
North Bay:	No. Delegate Nominated
Port Arthur, Fort William :	No Delegate Nominated

PRESIDENT AND OFFICERS

President:	William G. Finlay	VE3CLK
First Vice-President:	W. F. Choat	VE3CO
Second Vice-President:	John Williams	VE3AAO
Secretary:	A. K. Meen	VE3RX
Assistant Secretary:	William Bissell	VE3CTJ
Treasurer:	Banner Edwards	VE3SU
Chairman Public Relations:	Kenneth Andras	VE3UU
Bulletin Editor:	R. L. Curzon	VE3EXF
Chairman Technical Committee:	T. Vince	VE3CKU
Member Technical Committee:	O. Anderson	VE3AEJ
Legal Counsel:	A.K. Meen, Q.C.	VE3RX
Members at Large:	Banner Edwards	VE3SU
	Richard Guy	VE3TT
Public Relations (Temporary):	Roy Golding	VE3CUS
Chairman QSL Bureau:	Russ Buckley	VE3UW
Immediate Past President:	Rev. Father Le Claire	VE3CNV

THE ONTARIO AMATEUR

Vol. 1 no. 4
December 1966

The official bulletin of the Radio Society of Ontario Inc.

Published quarterly, January, April, July, and October
Since months are given in GMT, members should note that actual publication dates may be the month previous (or after!).

Correspondence should be addressed to:-

P. O. Box 334, Station "U",
Toronto 18, Ontario.

President W. G. Finlay, VE3CLK Secretary A. K. Meen, VE3RX

Editor R. L. Curzon, VE3EXF

APPEAL TO NON-MEMBERS

Your membership is needed! Sign and return today!

RADIO SOCIETY OF ONTARIO INC.

APPLICATION FOR MEMBERSHIP:

NAME ..... CALL .....

ADDRESS .....

..... D.O.T. DISTRICT .....

DATE ..... SIGNATURE .....

IF YOU ARE A MEMBER PLEASE PASS THIS APPLICATION ON TO A NON-MEMBER!

Membership FEE ---------- $ 2.00

MAIL TO:

Radio Society of Ontario Inc.
P. O. Box 334,
Station "U",
TORONTO 18, Ontario.

MESSAGE FROM THE PRESIDENT

FELLOW AMATEURS:

Probably before this appears in the Bulletin our membership will have reached the one thousand mark. This is indeed most gratifying and I feel shows that we are truly interested in having a strong Provincial Organization. I would like to think that by next year at this time that the figure is closer to two thousand members.

Reviewing the past year, I want to say first how much I have appreciated all the help and support I received from not only the other members of the Executive, but also the delegates. It was a year in which we have been able to put together material for a good bulletin, each time it has been published. Next year will be even better because like any growing organization we have had our share of errors.

One problem which confronts us and undoubtedly will continue, is that of getting the executive and or delegates together for a meeting.

It is to be hoped that as the years go by we can interest members to become delegates who have more time available to travel to various meeting places. In this way we will get a first hand viewpoint of what programmes the membership in all parts of the province would like R.S.O. to undertake.

In closing I wish to extend my very best wishes to everyone for a happy, healthy, and prosperous New Year.

73,

Bill VE3CLK

ELECTIONS FOR DELEGATES 1967

The following amateurs were duly nominated and elected as shown, as delegated representatives for the areas shown, for the year 1967.

Toronto Area 5 delegates

Ken Andras	VE3UU	A
Doug Roblin	VE3CTL	A
Charles Bailey	VE3BOF	A
Robert Murray	VE3EZS	A
Barney Colleck	VE3MB	A

Ottawa Area 2 delegates

Lorne Doreen	VE3SZ	A
Reese Powell	VE3DJK	A

Hamilton Area 2 delegates

Tom Kennedy	VE3NK	B
Herb Nelson	VE3BFG	B

Kingston Area 1 delegate

Art Blick	VE3AHU	A

Sault Ste. Marie Area 1 delegate

Les Brownlee	VE3BLZ	A

London Area 2 delegates

John Williams	VE3AAO	B
Tom McKee	VE3ETM	B

Kitchener Area 1 delegate

Allan Hampshire	VE3BWM	A

North Bay Area 1 delegate

Claude Roy	VE3WQ	A

No nominations were received from the Lakehead Area

A indicates elected by acclamation
B indicates elected by ballot

TELLERS: Keith Lee VE3FYF, Leo West VE3FWR, Jim Dezorzi VE3FWS

"Letter to the Editor" ------ R. S. O. November 2, 1966

1967 Centennial Project - Let's BUILD a better R.S.O.

Let this be my official resignation- as a delegate to R.S.O. from the Sault Ste. Marie Area.

Let this also be my resignation as "Member-at-large on the executive Committee of R.S.O."

I felt that I have no alternative but to resign from R.S.O. in the above capacities as I am in disagreement with several basic points which I shall outline below.

You may or may not be in accord with my reasons but if you are in agreement with any of them I suggest that you arm your delegate with letters instructing him to bring up one or all the points which YOU would like changed at the annual meeting in January. With this written support how can the EXECUTIVE COMMITTEE ignore the requests of YOUR delegates.

Here are ten points:

1. Define the DUTIES AND AUTHORITY of the delegate.

2. Have only delegates on the executive committee.

3. Have nine executive meetings per annum, one in each D.O.T. area with their expenses paid.

4. Cut the executive committee to NINE, one from each D.O.T. area.

5. Delete the R.S.O. forum from the A.R.R.L. convention.

6. Hold the R.S.O. Forum in the same location, as the ARRL convention, the day following this convention.

7. Make this R.S.O. Forum the Annual meeting where resolutions properly presented from the floor can be passed to change policy and/or by-laws of R.S.O.

8. Elect a special committee to count the votes for the annual election of delegates, such members should not include existing delegates or executive committee (should the suggestion in number 2 not be endorsed).

9. Raise the dues or cut down the number of bulletins to pay for the cost of delegates expenses to meetings.

10. Leave ARRL to the National Field and Keep R.S.O. on its home front - Ontario.

I am sure that not all of you will agree with the above in total or even in part - however I invite you to write to me or the R.S.O. about these subjects. I am looking forward to serving R.SO. again when the delegates have more power ---

Should this letter to the editor not be printed in the R.S.O. bulletin you shall be advised of its contents via your clubs early in the new year.

BUILD A BETTER R. S. O. VE3EAT (north of the French River)

FROM THE DESK OF THE SECRETARY - By A. K. Meen, VE3RX

In printing the Secretary's reply to VE3EAT, we feel that the average amateur may not be aware that the delegates appoint and can remove at any time they wish, one or all of the executive committee, as explained by VE3RX. Thus they can, should they wish, appoint themselves as the executive, and modify all procedures as they see fit.

-ED.

In this issue is a letter written by the late delegate from the Sault Ste. Marie District and I propose to deal, to the extent that would appear necessary in the circumstances, with each of the points which he purports to make. Using his numbering, I would observe:

1. Duties and authority of delegates are very simple. Basically a delegate's duty is to keep the Executive apprised of problems arising in his district and keep the members in his district apprised of the activities of the Society (delegates receive Minutes of all Executive Committee meetings whether they choose to attend them or not). The delegates have considerable authority in that they elect the directors and other officers comprising the executive Committee and have the authority to fire the Committee in whole or in part if the job is not being done to their satistaction.

2. In an organization as wide-spread as ours, to have a working committee meetings of which are held not less frequently then monthly and on some occasions weekly, composed of delegates coming as they do from all corners of the Province, is a financial impracticability. There are many men who are able to serve on the Executive Committee, but who through the nature of their amateur activities (e.g. 40cw, and 20 cw and other DX banks) are not sufficiently well known in their own districts that they could possibly be elected in their districts when on such bands as 75 metres phone. To restrict the Executive to elected delegates would be an unnecessary handicap (I am an elected delegate myself, having got here via 75 metres phone and so I feel that I can make this categorical statement).

3 & 4. Executive Meetings presently number well over twelve per year, with all expenses paid by the individual Executive members themselves. The suggestion that they be cut to nine could only come from someone who has never attended any such meetings, while the idea that a meeting should be held in each DOT area apparently arises from confusion between the object' of Executive Meetings and those of the delegates. Actually, delegates are at all times welcome at Executive Committee meetings, but we find that very few delegates bother to attend them. Furthermore, many delegates are elected knowing that they do not have time to attend more than more two delegate meetings a year, at which they will have ample opportunity to review all actions taken by the Executive Committee since the lat delegate's meeting.

5, 6 & 7 RSO Forums in the last few years at ARRL Conventions have been very helpful in assisting us in getting across to the amateur fraternity generally the aims and objectives of the Society, and all Convention Chairmen have been happy to accord the Society time for this purpose. It was remarked that there were few faces around the hotel lobby on Sunday morning following the Saturday night festivities at Niagara Falls last September. I wonder if the author realizes that Annual Meetings of the Society comprise meetings of the delegates, who by the terms of the Charter, By-laws and Companies Act, are the voice in all respects of the general members. If a delegate wishes to change policy or by-laws of the Society he may bring forward a Resolution to this effect at any annual or semi-annual meeting of the delegates.

8. Is the author aware that when the Secretarial Department handled the balloting last year, special scrutineers were invited to attend, they being neither delegates nor Executive Committee members, and in one case not even a member of the Society, and that when all ballot counting had been completed and tabulated, they completed certificates of approval. All of this material was submitted to the Delegates, at the meeting next following and was duly approved. A similar policy is to be followed this year. Furthermore, in all cases where elections are held, all Candidates are entitled to have their own scrutineer in attendance if they wish.

9. The average travelling distance for 9 delegates to attend a meeting somewhere in the Province is perhaps 500-600 miles. At realistic mileage cost of 10¢ a mile, this amounts to approximately $50.00 per delegate per meeting, i.e. $450.00 per meeting, or about $4,500.00 per year. Even assuming that several delegates could travel in one car, it is quite unlikely that the total cost per year could be cut to less than $2,000.00. The present revenue and budget of the Society is of the order of $2,000.00 per year, and so in order to come anywhere close to balancing the budget it would be necessary to double the fees from $2.00 to $4.00 per member per year. The result would be in all likelihood a reduction of membership from the order of 1,000 to perhaps 500 or 600, bringing the revenue back to approximately its present level and bankrupting the Society. A meeting in each district once a year seems to be a high price to pay for such a change.

10. R.S.O. has no intention of going National. We are only too happy to let the League represent us on a National basis because presently it costs the League several times its revenue from us as members to represent us at Ottawa and elsewhere through our Canadian director and vice-director. We are, however, thinking of arranging a meeting of Presidents and Secretaries of the various Provincial Societies to be held at some mutually convenient time during the A. R. R. R. L. National Convention being held at Montreal in July, 1967, with the thought of the formation of a sort of Federation whereby the various Societies can better keep in touch with one another both on local and National matters.

We are, of course, only too happy to publish the above-discussed letter, in its entirety. The letter however does grieve us after so much work has been done by so many with considerable expenditure of time and transportation dollars. No conceivable element of gain is to be achieved by any worker except the pure feeling of satisfaction in accomplishment of something on behalf of the amateur fraternity. Since the author of the letter has invited replies, perhaps we could invite opinions too.

Your scribe,

VE3RX, Secretary

Dear Sirs:

You asked for comments at the end of the RSO Bulletin Broadcast 21st September 1966.

May I suggest that the next Bulletin on the air is given out at dictation speed. It was even difficult at one point to know what the speaker said due to the rapid rate of utterance.

Also I do not think it good policy to ridicule generally those members or non-members who did have questions during the RSO Forum.

The section which quoted; mixed up with the extemporaneous balderdash which seemed to spew out of the air spontaneously; is not going to enhance the image of the Society especially by putting this on the air and coming from a party anonymously.

I do not intend this to taken personally but do hope this is brought to the attention of the anonymous party, so that future Bulletins are more mature and originate from the Executive body.

It is a step in the right direction to Broadcast a Bulletin.

I could sign this anonymously but feel anonymous letters are best ignored.

Yours very truly, Rowland C.E. Beardow, VE3AML
Editor "VE NEWS"

(The letter which quoted the paragraphs to which VE3AML takes exception was not written anonymously but it was broadcast anonymously since it appeared to the executive that the type of humour involved was that which represented the ham viewpoint in general. -- Newscast ed.)

Dear Mr. Finlay:

Gail and I would like to thank you, and through you the members of the "Radio Society" for the touching and sincere tribute to Rusty in the Ontario Amateur magazine.

We, as a family of course miss Rusty, but we are grateful for his honest life with us.

He enjoyed more than words can tell his work in "Ham" radio.

He never felt this work and that of your association a burden but a real privilege.

Would you convey to the writer of the editorial our sincere thanks.

We are,

Yours sincererly, Gail & Dorothy Brennan.

Mr. Kenneth Andras, (Chairman Public Relations R.S.O.)

May I take this opportunity of extending to you the grateful thanks of the Greater Toronto Regional Council for your assistance in connection with the recent "Camping-On-The-Green" project which took place opposite City Hall on Saturday, October 22nd.

The Jamboree-On-The-Air aspect of the project was much appreciated by all and, apparently, it turned out to be an extremely successful venture. We are indebted to you for the contribution which you made in this connection.

Both United Appeal and Scouting benefited immensely from this project and we are indebted to you for your co-operation and assistance.

Sincerely yours, Herbert E.D. Mitchell,
Regional Scout Executive.

Dear Ken: RE Newscast #1 RSO

By my count there were 50 known hams (including about 5 VE2) on the "Chicken Junction Net" when this bulletin was given at 8:35 p.m. on 9/21/66. There were another dozen who talked about the bulletin after the Net was over. BUT: R.S.O. has 942 members.

Why not make the next " Ontario Amateur" magazine contain each of the Newscasts? this will: Put the Newscasts on record; Make sure all RSO members know of them; Make your executive more and more careful to keep the Newscasts SHORT/SHARP/FACTUAL AND INTERESTING. The better you do this, the more likely you will be welcome by the "Chicken Junction Net" and continue to have no interruptions (which is very significant). In fact: If you and your cohorts can do a careful enough job of editing the Newscasts----you will have practically all you need for the magazine.

Good Luck and 73 Dave Lloyd VE3AW

Box 30, Nakina, Ontario
November 17th, 1966

Dear Banner:

Please excuse me for not writing sooner but I have somehow managed to put off this letter for one reason or other.

I received my Eico transmitter a day or two before your letter arrived. I thought to myself, "Boy! when the R.S.O. does something for you they sure don't waste any time about ite."

Thanks again for your help as it was very much appreciated.

73 Dennis Borotsik, VE3FRP

Silent Keys

It is with deep regret we publish the names of the following Silent keys:

William George (Bob) Budden VE3EWM, Toronto

Lawrence Dukes, VE3EID, Sudbury

John E. Midgley, VE3ACL, Fort Frances

John Lubenkov, VE3EUH, Elmira

R.S.O. STARTS RADIO NEWSCASTS

September 21, 1966, was an eventful day for RSO - being the first time that the long discussed radio newscasts went "on the air".

Preparations had been in hand for many months - but it is surprising how many details have to be tied up before a venture of this nature can be started, Broadcast licences, spare announcers, lines of speedy communication - all have to be carefully planned - and tested - if we are not to venture on a new project only to have it breakdown after a few occasions. So far the news has gone out without a hitch every Wednesday night (without a hitch? - well - there was a little scampering that night the low pass filter broke down 15 minutes before newscast time!).

For the means of sending out the news, we are of course indebted to Hose, VE3EQM, closely followed by Tom, VE3ETM, both of whom issued warm invitations to use the facilities of the Chicken Junction and Ontario Phone Nets respectively. There you will find us, fellers, every Wednesday night (we hope) at 12.00 zulu or soon after, during the winter session. Our thanks go out to both Hose and Tom for making it all possible, not to mention the net controllers, who, we strongly suspect, sometimes do not know quite what a newscast is doing on a net.

It has been an eventful period, with plenty of news to fill in space on the air. The election of delegates has of course been followed closely, members being informed weekly of the various nominations as they came in, places for elections, and balloting procedure.

The newscasts started a few days after the A.R.R.L. Convention at Niagara Falls, and actually commenced with a semi-humerous (sic) transcription of some remarks made about the conduct of part of the meeting. At this time the newscast was used to warn amateurs of the dangers we face in possible loss of part of our bands if we ever relax our constant alertness. It was stated that in March 1966 the membership of RSO was 518, later we were to hear that in all probability we would pass the 1000 mark before the year end. The newscasts have also been used to remind the executive and delegates of the dates of forthcoming meetings.

The changes of boundaries of DOT areas, though small, have affected the members to some extent, influencing voting and nominating rights, and members have been given the details in good time. Such diverse matters as pirate call signs, the exhibition of old time radio gear by Brock University, and the highly successful demonstration of ham operations at the Boy Scouts parade on October 22nd, were all publicized through the newscast. Incidentally the Brock University exhibition is not to be held until Easter- anyone willing to loan such old time gear has plenty of time to arrange details with Tom Vince, VE3CKU. The Boy Scouts demonstration proved to be an excellent piece of public service work.

The RSO is interested in being of service to the amateur community in anyway possible. Reports of occurences across the Province where the influence of the Society, even the attendance of a representative, are welcome, and will always be acted upon if possible.

RSO Starts Radio Newscasts (CONT'D)

The term of membership of our members has been changed from a calendar year basis to a twelve month term from any date. Publicity on this matter - together with the centennial QSL cards distributed through the Society - all this has been arranged. In addition of course when members write in to the Society on an interesting phase of operation, the newscasts present an excellent opportunity for airing their views.

This is all taking place under the guiding hand of our Chairman of Publicity Ken Andras, VE3UU. More on Wednesday - every week we hope, fellers!

Roy Golding, VE3CUS

THE TEN COMMANDMENTS OF ELECTRONIC SAFETY

1. Beware of the lightning that lurks in a undischarged capacitor lest it cause thee to be bounded upon thy backside in a most ungentlemanly manner.

2. Cause thou the switch that supplied large quantities of juice to be opened and surely tagged, so that thy days may be long on this earthly vale of tears.

3. Prove to thyself that all the circuits that radiateth and upon which thou worketh are grounded lest they lift thee to high frequency potential and cause thee to radiate also.

4. Take care thou useth the proper method when thou taketh the measure of high power circuits so that thou doth not incinerate both thee and the meter, for verily though thou hast no account number and can be easily replaced, the meter doth have one, and as a consequence bringeth much woe upon the supply department.

5. Tarry thou not amongst those who engage in intentional shocks for they are surely non-believers and are not long for this world.

6. Take care thou tampereth not with interlocks and safety devices, for this will incur the wrath of they seniors and bring the fury of they safety officer down upon they head and shoulders.

7. Work thee not upon energised equipment, for if thou doeth thy buddies will surely be buying beers without thee, and they space at the bar will be filled by another.

8. Verily, verily, I say unto thee never service high voltage equipment alone, for electric cooking is a slothful process, and thou might sizzle in thine own fat for hours on end before thy Maker sees fit to end they misery and and drag thee into His fold.

9. Trifle thee not with radioactive tubes and substance less thou commencest to glow in the dark like a lightning bug.

10. Commit thee to memory the works of the prophets, which are written in the books of instruction, which giveth the straight dope and which consoleth thee and cannot make mistakes (sic-ed).

Dedicated with fervent prayers to the Secretary of the Society.

Cards being held in the Q. S. L. Bureau for the following stations. Any person mailing in envelopes after November 7th, 1966 please ignore this list.

FAB	FBB	FCA	FDA	FEB	FFE	FGB	FHA	FIA	FJB	FKA	FLA
FAD	FBC	FCB	FDI	FEG	FFG	FGC	FHC	FIB	FJH	FKB	FLC
FAE	FBE	FCB	FDL	FEK	FFI	FGD	FGD	FIC	FJK	FKC	FLE
FAG	FBM	FCI	FDP	FEO	FFN	FGF	FGL	FJG	FJN	FKJ	FLK
FAI	FBN	FCL	FDQ	FEQ	FFT	FGG	FGP	FIM	FJP	FKM	FLO
FAJ	FBP	FCP	FDC	FER	FFW	FGI	FGS	FIN	FJQ	FKO	FLP
FAL	FBU	FCS	FDG	FEY	FEX	FGL	FGW	FIT	FJR	FKP	FLQ
FAM	FBV	FCU	FDH	FEJ	FFY	FGO	FGY	FIW	FJU	FKQ	FIR
FAN	FBX	FCE	FDJ	FEV	FFZ	FGP		FIY	FJW	FKR	FLS
FAR	FBZ	FCG	FDM	FEW	FFQ	FGQ		FIZ	FJX	FKS	FLV
FAS		FCJ			FFR	FGS				FKT	FLW
FAY		FCK				FGT				FKU	
FAZ		FCN				FGU					
						FGW					
						FGX					
						FGZ					

FMG	FND	FOD	FPA	FQA	FRB	FSA	FTE	FUA	FVB	FWA	FXA	FYI
FMK	FNF	FOH	FPC	FQB	FRF	FSC	FTG	FUB	FVG	FWF	FXD	FYJ
FMN	FNG	FOL	FPE	FQC	FRJ	FSE	FTI	FUC	FVI	FWG	FXF	FYC
FMO	FNI	FOO	FPL	FQE	FRP	FSK	FTJ	FUD	FVO	FWH	FXK	FYK
FMS	FNK	FOP	FPS	FQH	FRV	FSN	FTN	FUG	FVP	FWI	FXT	FYL
FMC	FNV	FOU	EPI	FQL	FRA	FSO	FTQ	FUR	FVA	FWK	FXV	FYN
FMP	FNM	FOW	FPM	FQQ	FRI	FSP	FTR	FUS		FWL	FXE	FYO
		FOM	FPO	FQU	FRR	FSQ	FTS	FUT		FWP	FXI	FYP
		FOG	FPT	FQW	FRX	FSS	FTT	FUU		FWQ	FXJ	FYT
		FOZ	FPU		FRY	FSW	FTZ	FUW		FWR	FXL	FYU
			FPV			FSU		FUX			FXL	FYV
			FPV					FUY			FXP	

FZA
FZE
FZG
FZJ
FZK
FZM
FZO
FZU
FZW
FZZ

The number of hams that sent in for cards from the other two lists published in the R.S.O. bulletin was very poor. (less than ten percent). Because of this I am finding it very difficult to operate the bureau, due to over crowding. In future cards will be held three months after notice is published, and then destroyed there are some very rare cards awaiting envelopes. Please invest five cents in a stamp. This is your bureau and it can not operate unless you redeem your cards.

73 & Merry Christmas

VE3UW

Russ

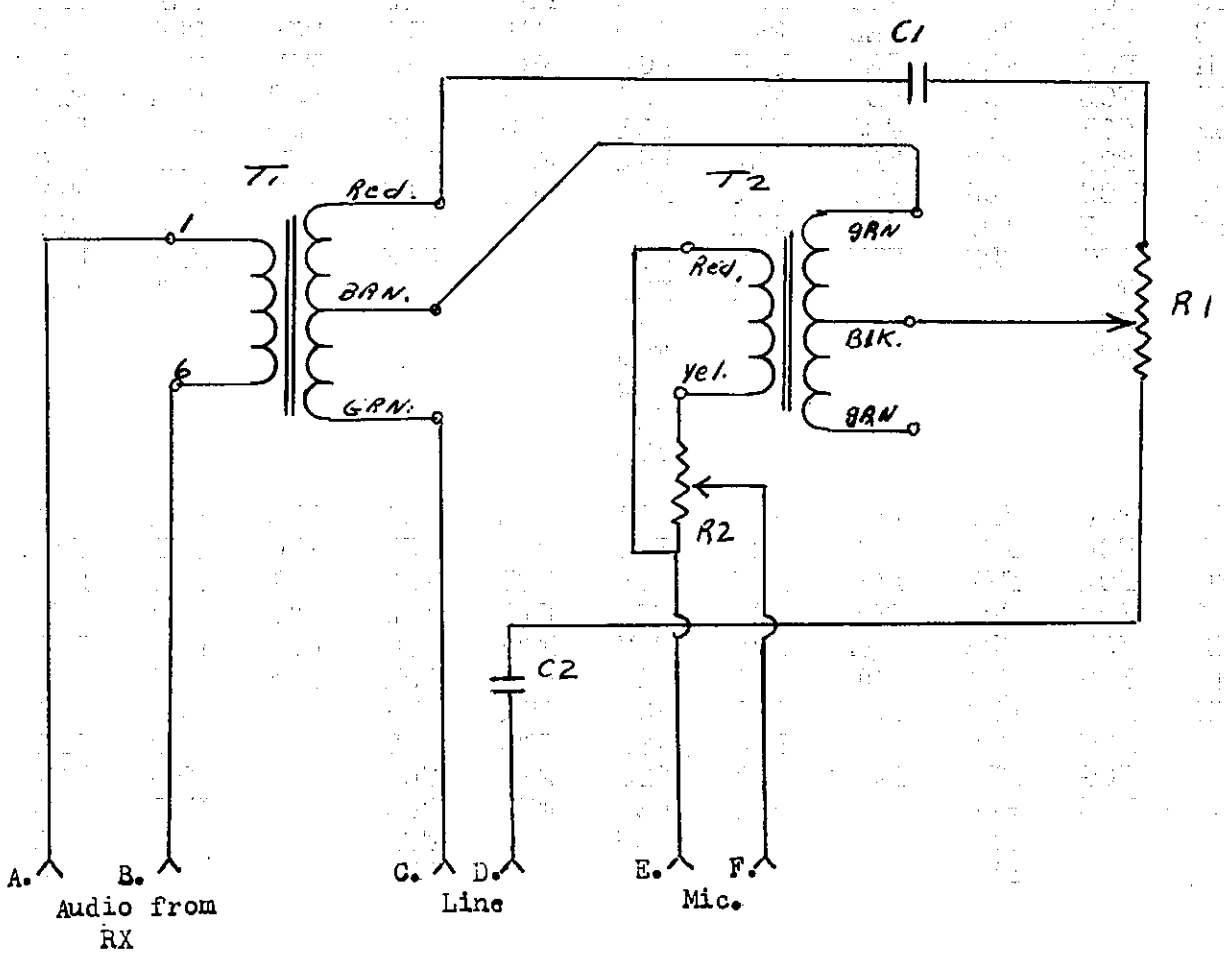

Parts List

T1 Copper Wire Products Co. (Toronto Ltd.) Type #2410

T2 Hammond Type #113

R1 50K pot. lin. taper (or what have you but no less than 50K.)

R2 50K audio taper (junk box type)

C1.C2 0.1 mfd. paper 200wv.

Assorted plugs, jacks or teminals to facilitate hookup.

THE GARDEN PATCH

Tom Vince, VE3CKU

Here is the circuit of a simple patch using ordinary garden variety components that will enable you to use your SSB rig directly off the line. Through carefull balance of R1 and adjustment of the anti-trip/VOX circuits of the rig, smooth VOX operation off the line is possible.

When the circuit has been completed, place a short circuit across the line terminals (points C.&D.) Apply a tone across the receiver input terminals (points A. & B.). Do this with an audio signal generator or connect the patch to the receiver and utilize the crystal calibrator by providing a hetrodyne.

Next place the probe of an AC VTVM across the mic circuit (points E. & F.) with R2 turned full up, adjust R1 for a minimum reading on the VTVM.

A point should be reached on rotation of R1 where between 40 to 50 dbs. of separation between receiver input and mic.circuit can be realized. This of course is dependant upon the type of transformers you can come up with from the junk box.

It would also probably to a wise move to incorporate a couple of RF chokes in the line circuit with a pair of .001 bypass caps. just to be on the safe side.

EDITORS NOTE:

T.V.I. Tom Vince VE3CKU, our Techincal Chairman is gathering information on RVI, will you please help him in this project by sending clippings of any information you may see in your local newspaper. Please include Dateline and name of paper.

For the Technical Man:

Trimmers are used for clipping sidebanks.
A volt is a place in the bank where they keep money.
Bleeders are often employed at the Red Cross blook bank
Ohm is the place on the range that cowboys sing about.
A coul-omb is an air-conditioned house.
Radiators are devices used to heat radios.

RADIO REG'S, PART II, SECTION 48 AND ALL THAT

By A. K. Meen, Q.C., VE3RX

I have been asked for an opinion on the interpretation of Section 48 of the General Radio Regulations, Part II.

Section 48 reads as follows:

"48 (1) Stations performing an amateur experimental service shall be so operated as not to interfere with the working of any government or commercial coast, land, mobile or ship station, or with broadcast reception.

(2) In the event of interference being caused by such a station the licencee shall be required by a departmental radio inspector to take such steps as are necessary for the prevention of further interference and may be required to restrict or cease operation of the station pending a satisfactory adjustment of the equipment."

The point seemingly requiring clarification is that contained in sub-section (1) providing that the service shall not be operated so as to interfere with broadcast reception. I.e. what "causes" the interference with the broadcast reception seems to be the difficult point. Is it caused by the presence of a radio signal operating on a completely different frequency from that to which the broadcast receiver (the term broadcast receiver is intended here to include TV receiving equipment) or by an inherent deficiency in the broadcast receiver?

2.

Clearly, both conditions have to be present before interference appears, but is the cause the presence of the unwanted but strictly legally radiated radio signal from the amateur experimental station, or is the causal relationship associated only with any deficiency in the broadcast receiver. In my opinion it is the latter, and a radio inspector who exercises the authority contained in Section 48 (2) merely as an expediency to get rid of the interference complaint, and in circumstances where there is no demonstrated mal function of the amateur experimental station concerned, is acting strictly beyond the authority granted by Section 48 (2).

My reasons for this opinion are as follows:

(a) Courts have repeatedly held that Sections of an Act or of a body of regulations may not be lifted from context and read disjunctively, but must be read conjunctively with the other sections in the Act or Regulations as the case may be. I.e. Sub-section (1) of Section 48 cannot be read and interpreted alone, but must be interpreted in conjunction with Sub-section (2) of Section 48. It is clear when reading Sub-section 2 of Section 48 that a cessation of operation of the station can only be maintained until such time as satisfactory adjustment of that station equipment is made, and if it is impossible to further improve the equipment and there being no fault to find with it, going back to Sub-section (1) it must then be deemed that interference is not occurring which can give rise to action under Sub-section (2). Thus it is clear that when the draftsman of the Sections considered the wording in sub-sections (1) and (2) they had in mind that the direct or proximate

3.

cause of the interference would then be narrowed down to some deficiency in the broadcast receiver over which the amateur experimental station operator would have no immediate control or authority and with respect to which he would not have any responsibility; and

(b) The law of causal relationship beteen initiating act or acts on the one hand and the result which they produce on the other, is extremely involved and is very deeply buried in the general law of negligence. However, in a numberof Supreme Court of Canada decisions, the cases distill down to a matter of wherein lies the fault or the deficiency on the part of a certain person or thing. Thus, even if it be shown that the presence of a strong radio frequency signal on a frequency upon which it is authorized to operate, does result in apparent interference with the operation of a broadcast receiver, and yet it can further be shown that there is no malfunction or maladjustment in the amateur experimental station from which the strong local signal is being received, then the interference must be taken to have arisen or been caused by a deficiency in the broadcast receiver and not caused in the legal sense by the amateur experimental station. Thus, it would be clear that the station has not been operated so as to interfere with broadcast reception and it would be quite improper in the circumstances for the remedial steps provided in sub-section (2) to be applied. I suggest that then the proper step would be for

4.

the inspector to advise the complainant/owner of the broadcast receiver to have his receiver suitably repaired or improved by engineering refinements as may be indicated so as to overcome the cause of the interference.

SALE AND WANT ADS' — $2.00 for 50 words

FOR SALE:	English Roto 3 Speed 7" tape recorder	$55.00
	Heathkit HO-13 ham scan scope	$85.00
	Heathkit HO-10 monitor scope	$70.00
	2 low pass filters-Johnson - 50 & 72 ohm	$15.00
	Power attenuator - Johnson - 250-42-3	$ 8.00
	Microphone with G-stand, astatic - so 190	$15.00
	6 & 2 meter Transmitter with Modulator and Power supply QST June 1960	$30.00
	Electronic Keyer (home brew)	$25.00

WANTED: SB. 200 or equivalent Linear.
Contact Ray Hunter, VE3UR, 7 Westrose Avenue, Toronto 18.

Bird Model 43 Thrulin Wattmeter. Collins 51J3 receiver
Mim McCullough, VE3CSO, 33 Florence Avenue, Willowdale.

FM REPEATERS FOR 2 METER MOBILE OPERATION

In the good old days, most mobile operation was done with lunch boxes or similar rigs with awkward antennas such as halos or big wheels. A fellow was lucky if he could work 2 or 3 miles mobile to mobile, although 50 miles base to mobile was possible.

In 1964 some VHFers in the Toronto area got together and decided that they would like to increase mobile to mobile coverage, and suddenly someone brought up the word "repeater". A lot of you fellows probably have heard this word mentioned on the air before and have wondered what this is all about , so we will try to explain it a little further. A repeater is really a base station which receives a mobile signal on one frequency and retransmits it on another frequency with omnidirectional gain antennas located on a high piece of ground or on a high tower. At the time,we had thought of putting an AM repeater on the air such as the one in Moncton, New Brunswick, which operates on the low end of 2. Then at an Oakville Do we started hearing about the success of the Buffalo Repeater, which operates on the high end of 2 using wide-band FM. So off we went to Buffalo where we were welcomed with open arms by Gil, W2EUP, and Fran, K2GUG. They showed us how they were able to work mobile to mobile for 6 or 7 miles using 5/8 wave vertical antennas which have 2 or 3 db gain over a 1/4 wave vertical. Through the repeater they were able to work 40-50 miles mobile to mobile. The Buffalo Repeater input is Channel B, 146.340 M/C. and the output is on Channel A, 146.940 M/C., the INTERNATIONAL CALLING FREQUENCY. With Buffalo being so close to Toronto, we decided to use a different input frequency in case the Toronto boys would happen to hit the Buffalo Repeater at the same as they would be hitting the Toronto Repeater. So we used Channel D, 146.460 M/C., as an input and Channel A as an output frequency. Syracuse uses these same frequencies, but we would not interfere with their repeater because they were so far away.

Snooping around the local mobile shops we were able to buy used FM rigs for $10 to $50 apiece which ran from 10 to 30 watts output. We found that it was very easy to convert these rigs for 2 Meters because the rigs originally operated in the 152-174 M/C. range. Some receivers had to be padded down with about 3 pf. capacitors across the tuned circuits from the antenna to the grid of the mixer stage, and also the last tuned circuit in the multiplier chain. In the transmitter the plate of the driver, final grid or final plate ~~of the~~ tanks had to be padded with about 3pf. These commercial receivers have a sensitivity of about .6uv for 20db. of quieting, but, by using the WA2STX transistor preamp (July '66 CQ) or the nuvistor preamp in the ARRL VHF Manual we were able to get the sensitivity down to .15uv., which improved weak signal reception.

Gus Papp, VE3CIA, worked on the transmitter and receiver and donated them to the repeater cause, and Al Vanderburgh, VE3ARV, and Keith Bentley, VE3DHL, built the transistorized logic circuits and mated the equipment together to form a repeater. Ian Davy, VE3FNK, built the cavities and with the help of VE3AL, VE3CLE, VE3BHT, VE3BMO, VE3EWZ, VE3ESE, VE3DYH, and VE3CSO, the TORONTO REPEATER, VE3RPT, was born. The receiver is a Motorola 80D with tuned cavities in the front end, and the transmitter is a GE. rig with a pair of 2E26's in the final which run 20 watts output. The antennas are 5/8 groundplanes mounted on a 70 ft. tower at Litton Systems in Rexdale with the receiving antenna at the top and transmitting antenna about 5 ft. below to give a maximum degree of electrical separation between the two. High Q cavities have to be used in both antennas lines to minimize the interaction between the receiver and transmitter as both are operating at the same time. Below we have shown a mobile in Scarborough working another mobile through the repeater.

TORONTO REPEATER VE3RPT

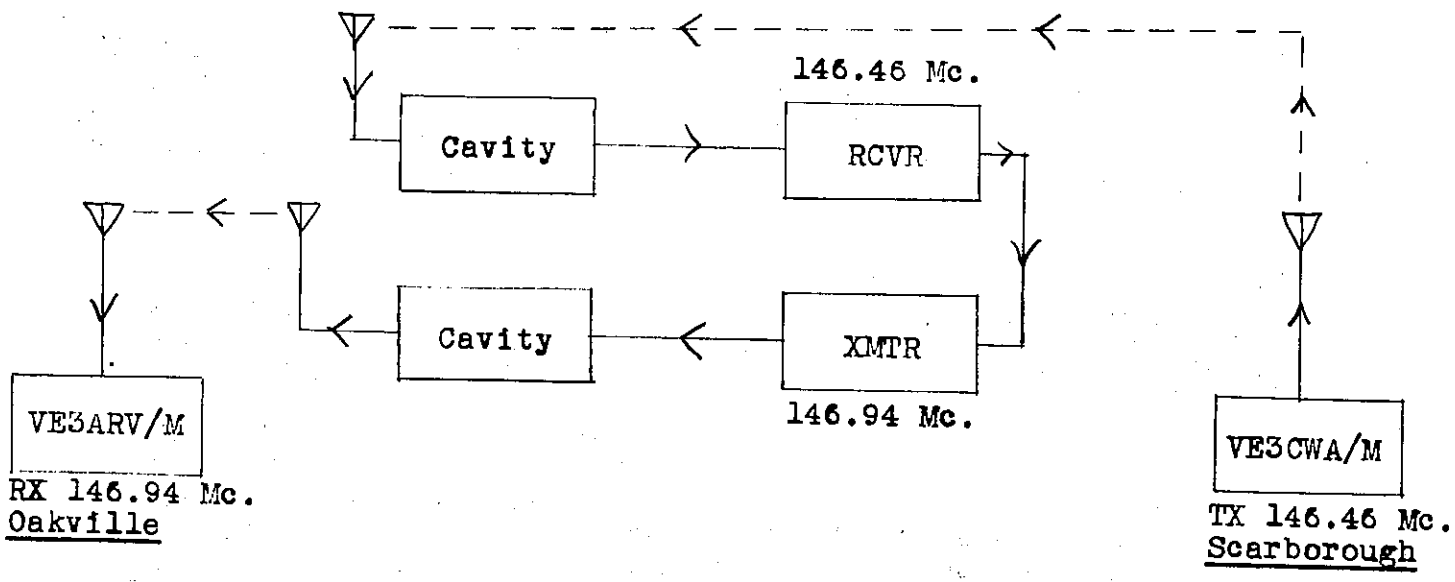

Let's suppose that VE3CWA/M is driving along in Scarborough and wishes to call through the repeater. The repeater receiver is going all the time but the transmitter filaments are running at half power, so it will take about 15 seconds for them to warm up. Paul picks up his mike, signs his call on Channel D, and stands by. The repeater automatically comes on and signs its call in modulated CW on Channel A, and then the carrier drops. Paul then transmits and says "VE3CWA/M through VE3RPT is monitoring Channel A". There is no need to call CQ on FM as everyone has a fixed tuned receiver on Channel A and if someone puts a signal on the air it will be heard instantly. VE3ARV/M is in Oakville and hears CWA through the repeater so then he transmits on Channel D, calls him, and a QSO begins.

The repeater transmitter stays on for 2 seconds after the mobile drops his carrier so that he will be able to hear the tail which tells him that he is hitting the repeater. Since all mobiles and bases are using the same channels we leave a break in between transmissions to let other fellows join in. After the repeater has not been used for 5 minutes or if it sticks on for 5 minutes, it will shut down until it is re-triggered by another station. Presently, the repeater covers most of Toronto as well as Lewiston, NY., Niagara Falls, and St. Catherines and we are dickering for a better location to give us increased coverage. We have been working on some 420M/C. gear to provide a link between the Toronto and Buffalo repeaters so that a mobile in one city will be able to work a mobile in the other. A tone dialing system has been incorporated in the repeater so that a mobile may dial up the Buffalo link, make the repeater sign its call, or switch the output channel to Channel M, 147.060. This channel is used for base to base rag-chewing, or what have you, to keep Channel A clear for mobiles or for calling. We have now formed a club called the Toronto FM Communications Association and anyone wishing to join, please contact Joe Cusimano, VE3OV, 2480 Bayview Ave., Willowdale, Ont.

VE3COW and VE3BNO have put the Ottawa Repeater on the air with the same input and output channels as Toronto. Their repeater is located on the 300 ft. radio station tower north of Ottawa and covers a huge area. This repeater is squelch operated and all a mobile has to do is transmit on Channel D and he will hit the repeater.

Murray Epstein, VE2AUU, has worked very hard in Montreal along with AREC to put 2 repeaters on in the Montreal area. One repeater, VE2ZO, inputs on Channel D and outputs on Channel A, and the other one, VE2MT, inputs on channel A and outputs on 147.500 M/C.

In St. Catherines a repeater has been built by Howard Cowling, VE3WT, and the Niagara Peninsula Amateur Radio Club. The repeater is presently operating with an input of Channel AB, 146.220, and an output of 147.240, Channel P, in St. Catherines. By the time this article is published they will have moved the repeater to Graham, VE3SI's QTH in Fonthill. The repeater has the call VE3SIX and will cover the Niagara Peninsula as well as the Toronto area.

Following is a list of FM channels and repeaters with their inputs and outputs. You'll notice that there is 60 kc. spacing between each channel to minimize cross-channel interference.

CHANNEL	FREQUENCY	USAGE	NOTE
AB	146.220	Repeater Input (St. Catherines)	
AA	146.280	Repeater Input	5
B	146.340	Repeater Input (Buffalo, Utica, NY.)	
C	146. 400	Repeater Input	
D	146.460	Repeater Input (Toronto, Syracuse, Ottawa Montreal)	
E	146.520	Unassigned	
F	146580	Unassigned	
G	146.640	Erie County working #2	
H	146.700	Wyoming County working #1	
I	146.760	Erie County working #1	
J	146.820	Lockport working	
K	146.880	Buffalo Repeater 2	5
A	146.940	INTERNATIONAL CALLING FREQUENCY	1,2
L	147.000	Erie County CD.	
M	147.060	Toronto Repeater Output 2 and working #1	3
N	147.120		
O	147.180	Toronto working #2 and St. Catherines working	
P	147.240	St. Catherines Repeater output	
Q	147.300	Orleans County CD.	
etc.		Unassigned	

NOTES

1 It is proposed that Channel A will be used for calling only
2 Most repeaters presently have outputs on Channel A.
3 The Toronto Repeater will output on A for calling and then switch to M for working.
4 Repeaters are primarily for use of mobile and portable units
5 AA and K channels reserved for 2nd Buffalo Repeater.

VE3HF in North Bay has been thinking about putting a repeater on the air and we have suggested that they use the same frequencies as Toronto so that travelling mobiles can work the other ~~guys~~ guy's repeater. We would like to hear some activity out of Orillia, Barrie, and Oshawa , and eventually run 2 Meter links all over Ontario. So, fellows, hop down to your nearest mobile shop, pick up a rig, and join the wonderful world of FM.

73 Jim